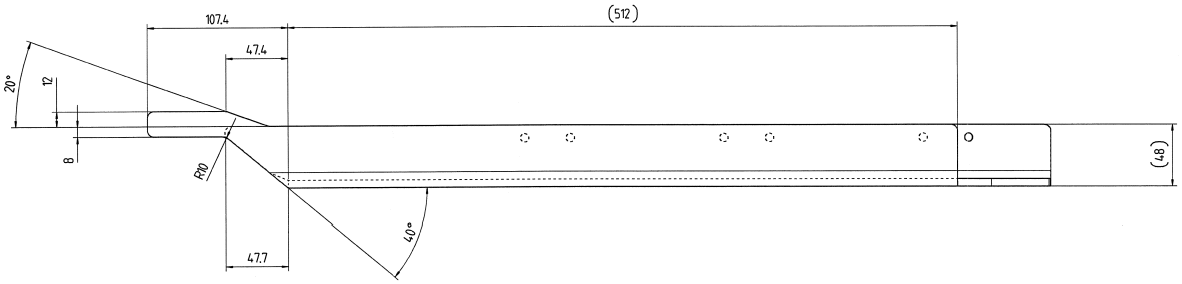

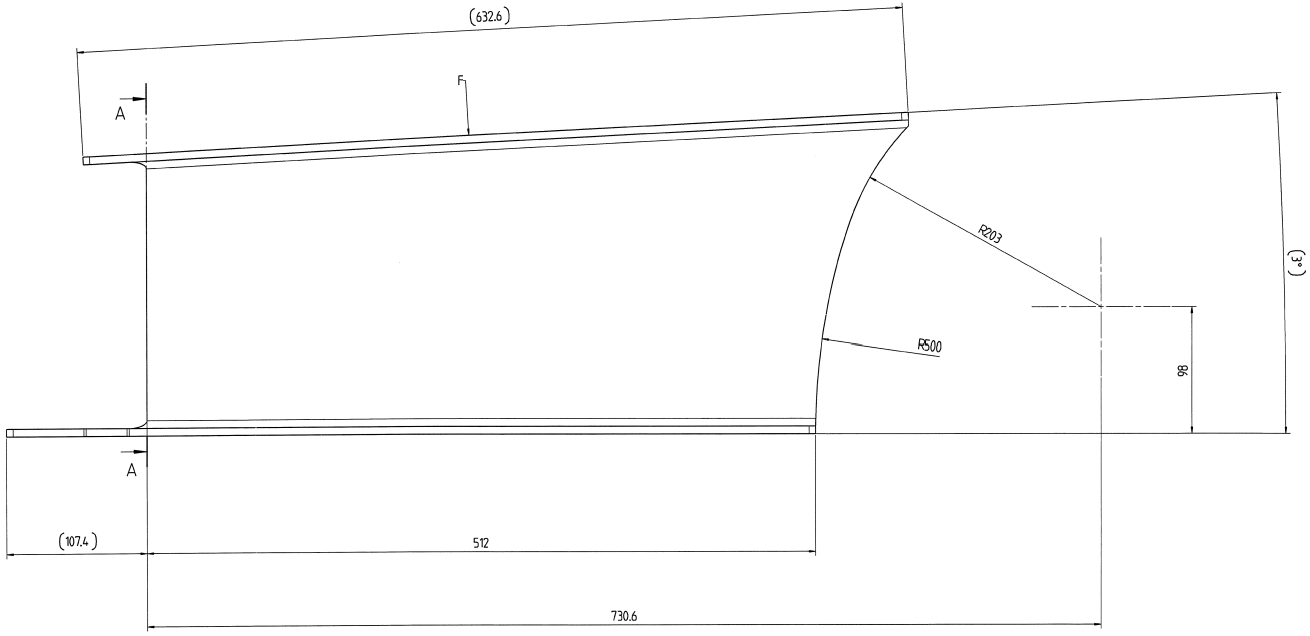

Section A-A

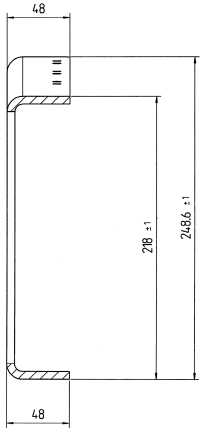

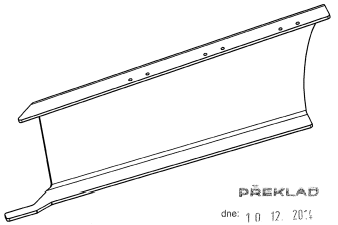

View following F

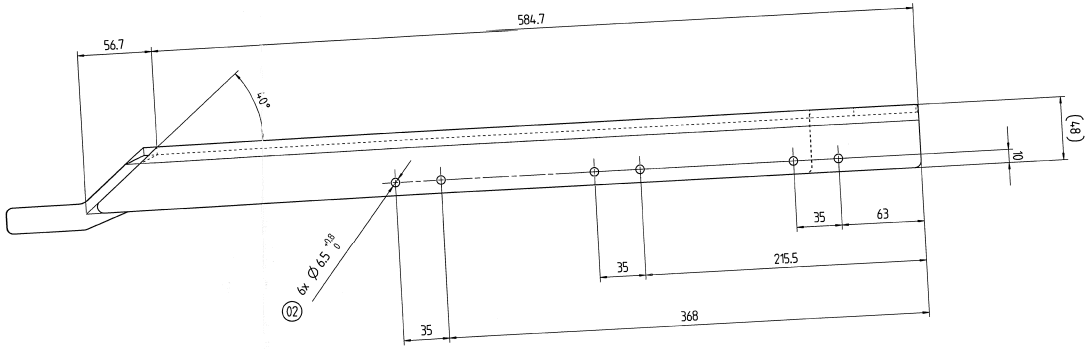

PŘEKLAD
dne: 10. 12. 2014
PROVEDL/A
Višňa
10-02-2016
ARCHIV
2
NZ 14/01374

NOTA : TROUŠŤNA MATERIÁLU NEROST. POLOMĚRY
- Metal sheet thickness : 6 mm
- Radii without dimension : R = 5
- Bend radii : R = 6

POLOMĚR 0774,80

Condition at time of delivery	
de-scaled (degree of purity SA 2 1/2 acc. ISO 8501-1)	X
without burrs acc. WN 11310	
Permissible top-end rounding during flame cutting (also positive bead acc. WN 10572)	
oil-free / free of grease	
oiled	
oiling permissible	X
Indicate the required condition at time of delivery with cn X.	

02

LASER cutting tolerances				
NOTA : min cutting radius without dimensions R = 1 mm unless otherwise specified				
≤ 30	30< ≤ 120	120< ≤ 400	400< ≤ 1000	1000 <
± 0,5	± 0,8	± 1,0	± 1,5	± 2,0

+0.5 -0.5

First angle projection

General tolerance (GT) in mm

Size range	≥ 30	> 120	> 400	> 1000
	≤ 30	≤ 120	≤ 400	≤ 1000

GT coarse					
L	1	2	2	3	4
∢	1	2	4	6	

Lengths (L) and angle (∠) = ± GT

Tolerance Symbols ISO 1101
- ○ roundness = 1/2e-Tol.
- ▱ straightness/flatness = GT
- ◎ concentricity/run out = GT
- ⌯ symmetry = GT
- / / parallelism = GT
- ⊕ position = GT

Languages: en,fr

Index	alteration	Change no	Fit	Toler.
02	Oiled --> Oiled permissible	T48720		
	Adding Ø6.5			

Inspection dim.
Auxiliary dim. ( )

	Date	Name
Drawn	24.1.2014	J.Fonteny
Checked	27.1.2014	F.Proust
Authd	28.1.2014	R.Pelletier
M.check.	4.2.2014	J.LeCosne

Confidential document
Refer to protection notice ISO 16016

Material: S235JR following EN10025-2
Blank no:
Title: side panel rear right
Drawing number: / / 11914012104
Repl.
Orig.
Weight: in kg 8.0
PROD.
Scale 1:2
Sheet: 1 of: 1

Released
11914012104d001
A1